DUCTWORK SYMBOLS

DOUBLE LINE	SINGLE LINE	ABBREVIATION	DESCRIPTION
			EXISTING DUCTWORK
			EXISTING TO BE REMOVED
			NEW DUCTWORK
			FLEXIBLE DUCTWORK
			FLEXIBLE CONNECTION
			SQUARE ELBOW WITH TURNING VANES
			RADIUS ELBOW
			TRANSITION
			SQUARE TO ROUND TRANSITION
UP	UP		RISE IN DIRECTION OF ARROW
DN	DN		DROP IN DIRECTION OF ARROW
			BRANCH
			END DOUBLE BRANCH WITH TURNING VANES
			DUCT END CAP
24X12 SA	24X12 SA		DUCT SIZE – FIRST NUMBER IS SIDE SHOWN
SD	SD	SD	SPLITTER DAMPER
BD	BD	BD	BALANCING DAMPER
VD	VD	VD	VOLUME DAMPER (OPPOSED BLADE)
BBD	BBD	BDD	BAROMETRIC OR BACKDRAFT DAMPER
FD	FD	FD	FIRE DAMPER WITH ACCESS DOOR
M SD	M SD	SD	SMOKE DAMPER WITH ACCESS DOOR (MOTORIZED)
M SFD	M SFD	SFD	SMOKE/FIRE DAMPER WITH ACCESS DOOR (MOTORIZED)
S	S		SMOKE DETECTOR IN AIR STREAM

DOUBLE LINE	SINGLE LINE	ABBREVIATION	DESCRIPTION
			SUPPLY DIFFUSER, REGISTER OR GRILLE IN BOTTOM OF DUCT OR IN CEILING 4-WAY UNLESS NOTED OTHERWSE.
CSD-1 6X6 120	DIFFUSER ID NECK SIZE CFM		
			RETURN AIR REGISTER OR GRILLE IN BOTTOM OF DUCT OR IN CEILING
RG-2 6X6 120	GRILLE ID NECK SIZE CFM		
			EXHAUST REGISTER OR GRILLE IN BOTTOM OF DUCT OR IN CEILING
ER-3 6X6 120	REGISTER ID NECK SIZE CFM		
			REGISTER OR GRILLE ON SIDE OF DUCT OR ON WALL (WITH EXTRACTOR)
WSG-4 12X12 120	REGISTER ID NECK SIZE CFM		
		SA REA	SUPPLY AIR OR RELIEF AIR – DROP
		SA REA	SUPPLY AIR OR RELIEF AIR – UP
		RA OA	RETURN AIR OR OUTSIDE AIR – DROP
		RA OA	RETURN AIR OR OUTSIDE AIR – UP
		EA	EXHAUST AIR – DROP
		EA	EXHAUST AIR – RISE
		SA REA	SUPPLY AIR OR RELIEF AIR – DROP
		SA REA	SUPPLY AIR OR RELIEF AIR – UP
		RA OA	RETURN AIR OR OUTSIDE AIR – DROP
		RA OA	RETURN AIR OR OUTSIDE AIR – RISE
		EA	EXHAUST AIR – DROP
		EA	EXHAUST AIR – RISE
		F	FAN
T	T		THERMOSTAT
S	S		SPACE SENSOR
S_a	S_a		SPACE SENSOR WITH SET POINT ADJUSTMENT
E	E		EXISTING
			POINT OF NEW CONNECTION

PIPING SYMBOLS

BUTTERFLY VALVE	TEMPERATURE CONTROL VALVE	GAUGE COCK	RISE IN PIPE	TEMPERATURE SENSOR
MOTORIZED VALVE (BUTTERFLY TYPE)	CHECK VALVE	VALVE IN RISER	PIPE TEE	DROP IN PIPE
GATE VALVE	DOUBLE CHECK VALVE	TEST PLUG	PIPE TEE DOWN	SENSOR WELL
MOTORIZED VALVE (GATE TYPE)	BALANCING VALVE	PRESSURE GAUGE	PIPE TEE UP	3-WAY CONTROL VALVE
SOLENIOD VALVE (GATE TYPE)	STRAINER AND BLOW-DOWN VALVE W/ HOSE END AND CAP	THERMOMETER	PIPE CAP	METER
BALL VALVE	MOTORIZED BY-PASS VALVE ASSEMBLY (N.O., N.C.)	FLEX CONNECTION	DIRECTION OF FLOW	UNDERGROUND PIPING
ACTUATED BALL VALVE		HOSE BIBB	PIPE CONTINUATION	PRESSURE REDUCING VALVE
GLOBE VALVE	PRESSURE RELIEF VALVE	UNION	EXISTING PIPING	
MOTORIZED GLOBE VALVE	OS&Y VALVE	CONCENTRIC REDUCER ECCENTRIC REDUCER	EXISTING PIPING TO BE REMOVED NEW PIPING	

PIPING ABBREVIATIONS

B	BRINE
BBD	BOILER BLOWDOWN
BF	BOILER FEEDWATER
CA	COMPRESSED AIR
CD	CONDENSATE DRAIN
CF	CHEMICAL FEED
CR	CONDENSATE RETURN
CW	DOMESTIC COLD WATER
CWR	CONDENSER WATER RETURN
CWS	CONDENSER WATER SUPPLY
CHWR	CHILLED WATER RETURN
CHWS	CHILLED WATER SUPPLY
D	DRAIN
DP	PUMPED DRAIN
DSP	DRY STAND PIPE
FO	FUEL OIL
FOR	FUEL OIL RETURN
FOV	FUEL OIL VENT
FS	FIRE SPRINKLER PIPE
HCR	HEATING/COOLING WATER RETURN
HCS	HEATING/COOLING WATER SUPPLY
HPC	HIGH PRESSUR CONDENSATE
HPS	HIGH PRESSURE STEAM
HRR	HEAT RECOVERY RETURN
HRS	HEAT RECOVERY SUPPLY
HW	DOMESTIC HOT WATER
HWR	HEATING WATER RETURN
HWS	HEATING WATER SUPPLY
IA	INSTRUMENT AIR
LP	LIQUID PROPANE GAS
LPC	LOW PRESSURE CONDENSATE
LPS	LOW PRESSURE STEAM
MA	MEDICAL AIR
MAV	MANUAL AIR VENT
MU	MAKEUP WATER
N	NITROGEN
NG	NATURAL GAS
NO	NITROUS OXIDE
O	OXYGEN
OF	OVERFLOW
PD	PUMPED DISCHARGE
RD	ROOF DRAIN
RHW	RECIRCULATED DOMESTIC HOT WATER
SCW	SOFT COLD WATER
SD	SANITARY DRAIN
STD	STORM DRAIN
SV	STEAM VENT
V	VENT
VFD	VARIABLE FREQUENCY DRIVE
VT	EQUIPMENT AND VALVE VENT RELIEF
VTR	VENT THRU ROOF

EQUIPMENT PREFIXES

AD	AIR DRYER
ACU	AIR CONDITIONING UNIT
AHU	AIR HANDLING UNIT
AFD	ADJUSTABLE FREQUENCY DRIVE
AS	AIR SEPERATOR
BLR	BOILER
BOX	TERMINAL OR VAV BOX
CDR	CONDENSER
CFR	CHEMICAL FEEDER
CHR	CHILLER
CP	COMPRESSOR
CPL	CONTROL PANEL
CRU	CONDENSATE RETURN UNIT
CEG	CEILING EXHAUST GRILLE
CRG	CEILING RETURN GRILLE
CSD	CEILING SUPPLY DIFFUSER
CT	COOLING TOWER
DA	DEAERATOR
DPR	DAMPER
DS	DISCONNECT
DV	DRAIN VALVE
EF	EXHAUST FAN
EDF	ELECTRIC DRINKING FOUNTAIN
EDH	ELECTRIC DUCT HEATER
EXP	EXPANSION TANK
FIT	FLOW INDICATING TRANSMITTER
FD	FLOOR DRAIN
FLT, FF	AIR FILTER
FM	FLOW METER
FMS	FLOW MEASURING STATION
FS	FLOW SWITCH
GHU	GAS HEATER UNIT
HB	HOSE BIBB
HEX	HEAT EXCHANGER
HP	HEAT PUMP
HTT	HEAT TRACING TAPE
JS	JANITORS SINK
L	LAVATORY
LCV	LEVEL REGULATOR, SELF CONTAINED
OPS	OIL PUMP SYSTEM
P, PMP	PUMP
PCV	PRESSURE REGULATOR, SELF CONTAINED
PT	PRESSURE TRANSMITTER
PRV	PRESSURE REGULATING VALVE
PVL	PRESSURE VESSEL
P/T	PRESSURE/TEMPERATURE VALVE
S	SINK
SG	SUPPLY GRILLE
SH	SHOWER
SS	SERVICE SINK
TCV	TEMPERATURE CONTROL VALVE
TRV	TEMPERATURE REGULATING VALVE
U	URINAL
WB	WALL BOX
WC	WATER CLOSET
WCO	WALL CLEANOUT
WG	WALL GRILLE

MISC. ABBREVIATIONS

APD	AIR PRESSURE DROP
AFF	ABOVE FINISHED FLOOR
BD	BALANCING DAMPER
BDD	BACKDRAFT DAMPER
CFM	CUBIC FEET PER MINUTE
CH	CHILLED WATER
CMU	CONCRETE MASONRY UNIT
CO	CLEAN OUT
CONN	CONNECTION
CONT	CONTINUED
DET	DETAIL
DIA	DIAMETER
EADB	ENTERING AIR DRY BULB
EAT	ENTERING AIR TEMPERATURE
EAWB	ENTERING AIR WET BULB
EIN	EQUIPMENT IDENTIFICATION NUMBER
EMB	EMBEDMENT
EXAM	EXAMPLE
(E)	EXISTING
EXP	EXPANSION
F & T	FLOAT AND THERMOSTATIC
FCO	FLOOR CLEAN OUT
FF	FINISH FLOOR
FGR	FLUE GAS RETURN
FUT	FUTURE
GPM	GALLONS PER MINUTE
HP	HORSE POWER
ISO	ISOLATION
LADB	LEAVING AIR DRY BULB
LAT	LEAVING AIR TEMPERATURE
LAWB	LEAVING AIR WET BULB
LPG	LIQUID PETROLEUM GAS
MB	MACHINE BOLT
MBH	THOUSAND BRITISH THERMAL
MFR	MANUFACTURED
MH	MANHOLE
NC	NORMALLY CLOSED
NIC	NOT IN CONTRACT
NO	NORMALLY OPEN
PORT'BL	PORTABLE
REQ'D	REQUIRED
SEC	SECONDARY
SS	STAINLESS STEEL
SUM	SUMMER
TSP	TOTAL STATIC PRESSURE
TYP	TYPICAL
WCO	WALL CLEAN OUT
WIN	WINTER
WPD	WATER PRESSURE DROP
W/	WITH
1	REVISION

EQUIPMENT IDENTIFICATION

NEW EQUIPMENT IS ASSIGNED A NUMBER WITH UP TO THREE (3) ALPHA CHARACTER PREFIXES. THE ALPHA PREFIXES WILL IDENTIFY THE TYPE OF EQUIPMENT. IE "BOX" FOR TERMINAL BOX, "EF" FOR EXHAUST FAN, AND SO FORTH. EQUIPMENT NUMBERING SHALL BE AS FOLLOWS:

NOTE:
TAG ENLARGED FOR CLARITY.

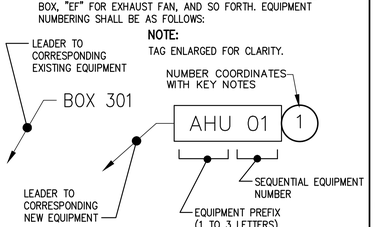

PIPING IDENTIFICATION

NEW PIPING IS ASSIGNED A NUMBER WITH UP TO FOUR (4) ALPHA CHARACTER PREFIXES. THE ALPHA PREFIXES WILL IDENTIFY THE TYPE OF SERVICE. IE "CW" FOR COLD WATER PIPING, "SD" FOR SANITARY DRAIN PIPING, AND SO FORTH. PIPING NUMBERING SHALL BE AS FOLLOWS:

NOTE:
TAG ENLARGED FOR CLARITY.

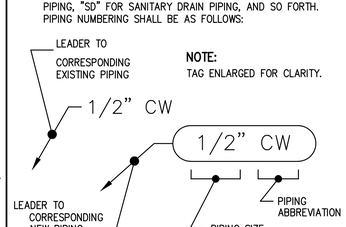

DETAIL NUMBERING SYSTEM

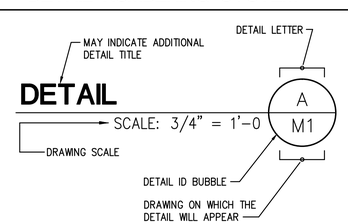

NOTE:
SECTION NUMBERING SYSTEM IS IDENTICAL EXCEPT NUMBERS ARE USED. eg. SECTION 1/M1.

MECHANICAL DRAWING INDEX

DWG.	DRAWING DESCRIPTION
M0.1	SYMBOLS, ABBREVIATIONS, AND DRAWING INDEX
M0.2	GENERAL NOTES AND DETAILS
M0.3	SCHEDULES, DETAILS AND VENTILATION CALCULATIONS
M1.1	MECHANICAL DEMOLITION PLAN
M2.1	MECHANICAL PLAN

THE MECHANICAL SYMBOLS, EQUIPMENT PREFIXES, AND PIPING ABBREVIATIONS ARE COMPREHENSIVE. SOME EQUIPMENT PREFIXES, AND PIPING ABBREVIATIONS MAY NOT APPLY TO THIS PROJECT SEE GENERAL NOTES ALSO.

JOHNSTON ENGINEERING COMPANY
HEATING, VENTILATION, AIR CONDITIONING, PLUMBING
9777 N. 91ST ST., STE 100, SCOTTSDALE, AZ 85258
TELEPHONE (480) 443-8773 • FAX (480) 443-4591

THE GREAT SEAL OF GILA COUNTY ARIZONA 1881

22374 THOMAS W. JOHNSTON 4-8-15 Date Signed ARIZONA, U.S.A. Expires 6/30/2015

SYMBOLS, ABBREVIATIONS AND DRAWING INDEX

COPPER ADMIN BUILDING
GILA COUNTY PUBLIC WORKS
DEPARTMENT GLOBE, ARIZONA

PROJECT NUMBER: 15013
DATE: 04-08-2015
DRAWN BY: E. GONZALEZ
DESIGNED BY: E. GONZALEZ
APPROVED BY: T. JOHNSTON
SHEET NUMBER: M0.1

ALL DRAWINGS CONTAINED HEREIN WERE DESIGNED AND DRAWN IN THE U.S.A. COPYRIGHT 2015 JOHNSTON ENGINEERING COMPANY. DRAWINGS ARE FOR USE SOLELY IN RESPECT TO THIS PROJECT. THEY ARE NOT TO BE USED ON OTHER PROJECTS OR FOR ADDITIONS TO THE SCOPE OF WORK WITHOUT THE SPECIFIC WRITTEN CONSENT OF JOHNSTON ENGINEERING COMPANY

GENERAL NOTES:

1. PROVIDE ALL WORK, MATERIALS AND LABOR TO ACCOMPLISH A COMPLETE OPERABLE SYSTEM. OBTAIN ALL PERMITS AND PAY ALL FEES.

2. ALL WORK SHALL COMPLY WITH THE 2003 IMC AND THE 2003 IPC.

3. GUARANTEE MATERIAL, EQUIPMENT AND INSTALLATION FOR TWO YEARS FROM SUBSTANTIAL COMPLETION DATE. ALL DEFECTS SHALL BE CONTRACTORS RESPONSIBILITY.

4. THE CONTRACTOR IS REQUIRED TO EXAMINE THE PROJECT SITE PRIOR TO BIDDING AND IDENTIFY ALL CONDITIONS THAT MAY AFFECT THE WORK. FIELD VERIFY EXISTING EQUIPMENT, DUCTS, MECHANICAL PIPING, CONDUITS, FIRE SPRINKLERS, LIGHTS, PLUMBING PIPING, BUILDING STRUCTURE AND ALL OTHER FIELD CONDITIONS PRIOR TO BIDDING PROJECT. COORDINATE NEW WORK WITH EXISTING CONDITIONS. NOTIFY THE ENGINEER IMMEDIATELY IF ANY DISCREPANCIES ARE NOTED. NO CONSIDERATION WILL BE GIVEN IF THE CONTRACTOR FAILS TO EXAMINE THE PROJECT SITE PRIOR TO BIDDING.

5. THIS DESIGN IS BASED ON THE SCHEDULED MANUFACTURER. IF ANOTHER MANUFACTURER IS USED, THE CONTRACTOR SHALL BE RESPONSIBLE FOR ALL ADDITIONAL MODIFICATIONS INCLUDING ANY ELECTRICAL OR STRUCTURAL ENGINEERING REQUIRED TO MODIFY THE STRUCTURAL SUPPORT AND PIPING.

6. PROVIDE INSULATION WITH ALL SERVICE JACKET HAVING A CONDUCTIVITY (k) NOT EXCEEDING 0.21 BTU PER INCH PER HOUR–SQUARE FOOT DEGREE F IN ACCORDANCE WITH IECC AS FOLLOWS:
   1) HW LESS THAN 1–1/2 INCH PIPE SIZE = 1 INCH. (MAXIMUM 140°F).
   2) HW GREATER THAN OR EQUAL TO 1–1/2 INCH PIPE SIZE = 2 INCH. (MAXIMUM 140°F).
   3) CHILLED WATER PIPE (MINIMUM 40°F)= 1 INCH.
   4) CHILLED WATER LESS THAN 40°F = 1–1/2 INCH.
   6) THE FIRST 10 FEET OF CONDENSATE DRAIN = 1/2 INCH.

7. ALL OUTDOOR PIPING TO BE ALUMINUM JACKETED.

8. SUPPORT PIPING PER MECHANICAL AND PLUMBING CODES LISTED ABOVE.

9. FLUSH AND WATER TREAT NEW CHILLED WATER, CONDENSER WATER, HEATING WATER, AND DOMESTIC PLUMBING PIPING.

10. PROVIDE DIELECTRIC UNIONS ON ALL CONNECTIONS BETWEEN DISSIMILAR METALS.

11. CEILING IS BEING REMOVED/REPLACED UNDER THIS CONTRACT. SEE ARCHITECTURAL DRAWINGS.

12. PROVIDE METAL IDENTIFICATION TAGS FOR ALL VALVES. PROVIDE STENCILED LABELS AND ARROWS ON ALL PLUMBING AND HYDRONIC PIPING. USE SYMBOLS AND ABBREVIATIONS SHOWN ON DRAWING LEGEND AND EQUIPMENT SCHEDULES.

13. SEE ARCHITECTURAL DRAWINGS.

14. COORDINATE THE SALVAGE OR DISPOSAL OF EQUIPMENT WITH THE OWNER. ALL ITEMS BEING REMOVED FROM PROJECT SHALL BE DISPOSED OF OFF SITE.

15. TAKE ALL PRECAUTIONS TO MAINTAIN WEATHER (WATER) TIGHT CONDITIONS ON THE ROOF DURING REMOVAL AND REPLACEMENT OF AIR CONDITIONING UNITS. CONTRACTOR SHALL RESPOND WITHIN 90 MINUTES TO PROJECT RELATED ISSUES.

16. PROTECT ROOF FROM DAMAGE DURING CONSTRUCTION.

17. PROTECT ALL WORK SURFACES FROM DUST AND DEBRIS DURING CONSTRUCTION. CLEAN ENTIRE WORK AREA AT THE END OF EACH SHIFT.

18. CONTRACTOR SHALL VERIFY THAT ALL SCHEDULED EQUIPMENT AND EQUIPMENT RATINGS AND CHARACTERISTICS ARE APPROPRIATE FOR THE PROJECT PRIOR TO ORDERING THE EQUIPMENT. NOTIFY ENGINEER IMMEDIATELY IF ANY DISCREPANCIES ARE NOTED.

19. ALL EQUIPMENT AND MATERIAL MUST BE LISTED AND LABELED FOR ITS USE. MANUFACTURER'S INSTALLATION INSTRUCTIONS SHALL BE ON–SITE AT TIME OF INSPECTION.

MECHANICAL GENERAL NOTES:

1. PROVIDE NEW DUCT, DUCT TRANSITIONS, DAMPERS, RETURN AND SUPPLY GRILLES, AND CONDENSATE DRAIN/DRAIN PIPING. SEE DIFFUSER/GRILLE SCHEDULE AND DETAIL A/M0.2 FOR GRILLE INSTALLATION. PAINT THE INTERIOR OF THE DUCT BEHIND GRILLES FLAT BLACK. PROVIDE BALANCING DAMPER ON ALL SUPPLY DIFFUSERS NEAR MAIN DUCT.

2. INSTALL ALL EQUIPMENT TO MAINTAIN MANUFACTURERS' RECOMMENDED CLEARANCES AND CODE CLEARANCE REQUIREMENTS. PROVIDE CONCRETE PADS, CURBS AND VIBRATION ISOLATION UNDER EQUIPMENT FOLLOWING EQUIPMENT MANUFACTURERS RECOMMENDATIONS.

3. NEW SMOKE DETECTORS (AREA OR DUCT) SHALL BE TESTED BY AN APPROVED TESTING AGENCY OR A QUALIFIED THIRD PARTY SPECIAL INSPECTOR IN ACCORDANCE WITH MECHANICAL CODE SECTION 606. THE SPECIAL INSPECTOR/TESTING AGENCY SHALL BE AN INDEPENDENT THIRD PARTY INDIVIDUAL OR FIRM AND SHALL NOT BE THE INSTALLING CONTRACTOR. A PROFESSIONAL ENGINEER SHALL SUBMIT A FINAL SIGNED AND SEALED REPORT TO THE MECHANICAL INSPECTOR PRIOR TO CITY ISSUANCE OF FINAL INSPECTION APPROVAL OR OCCUPANCY APPROVAL, INCLUDING CONDITIONAL OCCUPANCY APPROVAL.

4. ALL JOINTS, LONGITUDINAL AND TRANSVERSE SEAMS AND CONNECTIONS IN DUCTWORK, SHALL BE SECURELY FASTENED AND SEALED WITH WELDS, GASKETS, MASTICS (ADHESIVES), MASTIC–PLUS–EMBEDDED–FABRIC SYSTEMS OR TAPES. TAPES AND MASTICS USED TO SEAL DUCTWORK SHALL BE LISTED AND LABELED IN ACCORDANCE WITH UL 181A AND SHALL BE MARKED 181A–P FOR PRESSURE–SENSITIVE TAPE. TAPES AND MASTICS USED TO SEAL FLEXIBLE AIR DUCT AND FLEXIBLE CONNECTORS SHALL COMPLY WITH UL 181B AND SHALL BE MARKED 181B–FX FOR PRESSURE–SENSITIVE TAPE OR 181M FOR MASTIC. DUCT CONNECTIONS TO FLANGES OR AIR DISTRIBUTION SYSTEM EQUIPMENT SHALL BE SEALED AND MECHANICALLY FASTENED. UNLISTED DUCT TAPE IS NOT PERMITTED AS A SEALANT ON ANY METAL DUCTS.

5. PROVIDE AND INSTALL INTERNATIONAL MECHANICAL CODE GAUGE THICKNESS GALVANIZED SHEET METAL DUCT WITH VAPOR BARRIER ACCORDING TO SMACNA REQUIREMENTS. ALL MATERIALS EXPOSED WITHIN DUCTS OR PLENUMS SHALL HAVE A FLAME–SPREAD INDEX OF NOT MORE THAN 25 AND A SMOKE–DEVELOPED RATING OF NOT MORE THAN 50 WHEN TESTED IN ACCORDANCE WITH THE TEST FOR SURFACE BURN CHARACTERISTICS OF BUILDING MATERIALS, IBC STANDARDS. PIPING EXPOSED IN DUCTS OR PLENUMS SHALL HAVE SAME INDEXES WHERE TESTED IN ACCORDANCE WITH ASTM E84 AND UL 723. NO PLASTIC CONDENSATE DRAIN PANS ARE ACCEPTABLE. SUPPLY AND RETURN DUCTS AND PLENUMS LOCATED IN UNCONDITIONED SPACE SHALL BE INSULATED WITH A MINIMUM OF R–6 INSULATION AND WITH A MINIMUM OF R–8 INSULATION WHEN LOCATED OUTSIDE THE BUILDING. WHEN LOCATED WITHIN A BUILDING ENVELOPE ASSEMBLY, THE DUCTS OR PLENUMS SHALL BE SEPARATED FROM THE BUILDING EXTERIOR OR UNCONDITIONED OR EXEMPT SPACES BY A MINIMUM R–8 INSULATION, OR THE DUCTS AND PLENUMS THEMSELVES SHALL BE INSULATED WITH A MINIMUM R–8 INSULATION. MATERIALS WITHIN PLENUMS SHALL BE NONCOMBUSTABLE OR SHALL BE LISTED AND LABELED AS HAVING A FLAME SPREAD INDEX OF NOT MORE THAN 25 AND A SMOKE–DEVELOPED INDEX OF NOT MORE THAN 50 WHEN TESTED IN ACCORDANCE WITH ASTM E 84 OR UL 723.

6. HYDRONIC PIPING TO BE SEAMLESS SCHEDULE 40 BLACK STEEL PIPE WITH GROOVED MECHANICAL COUPLINGS, THREADED FLANGED OR WELDED FITTINGS AND JOINTS. SAND BLAST, PRIME AND EPOXY PAINT (GRAY) ALL UNINSULATED PIPE AND SUPPORTS.

7. LOCATE EXHAUST A MINIMUM OF 10–FEET FROM ANY OUTSIDE AIR INTAKE AND A MINIMUM OF 1–FOOT FROM ANY VERTICAL SURFACE.

8. REMOVE AND REINSTALL EXISTING CEILING TO ACCOMMODATE DUCT AND OR EQUIPMENT REMOVAL AND INSTALLATION.

9. CAP ALL DUCT OPENINGS THAT RESULTED FROM DUCT REMOVAL UNDER THIS PROJECT.

10. CORRECT AND REPAIR ANY LEAKAGE IN NEW DUCTWORK WHERE THE INTEGRITY HAS BEEN COMPROMISED.

12. COORDINATE DUCT ROUTING WITH SURROUNDING CONDITIONS AND CEILING STRUCTURE.

13. NO RETURN AIR PLENUM EXISTS IN THIS SUITE.

14. AIR BALANCE THE EQUIPMENT TO THE CFM SHOWN ON DRAWINGS. PROVIDE AIR–BALANCE REPORT PER MECHANICAL CODE SECTION 403. TEST AND BALANCE HYDRONIC SYSTEMS USING AABC STANDARDS. PROVIDE A COPY OF BALANCE REPORT TO MECHANICAL INSPECTOR FOR FINAL REVIEW.

15. PROVIDE PROGRAMMABLE SETBACK THERMOSTATS. INSTALL TO COMPLY WITH ADA GUIDELINES.

16. PROVIDE SHUTOFF DAMPERS, MOTORIZED ACTUATORS AND CONTROLS IN OUTSIDE SUPPLY AIR DUCTS AND EXHAUST DUCTS TO AUTOMATICALLY SHUT WHEN THE SYSTEM OR THE SPACE SERVED ARE NOT IN USE, EXCEPT FOR GRAVITY DAMPERS ON BUILDINGS LESS THAN THREE STORIES.

17. MECHANICAL SYSTEM SHALL OPERATE CONTINUOUSLY DURING OCCUPIED PERIODS TO MAINTAIN VENTILATION REQUIREMENTS PER MECHANICAL CODE.

18. PROVIDE METALLIC AND NONMETALLIC FLEXIBLE DUCTS CONFORMING TO THE MECHANICAL CODE, NFPA 90B, AND TESTED IN ACCORDANCE WITH UL 181.

19. PROVIDE ADHESIVES, VAPORS, BARRIERS AND TAPE CONFORMING TO NFPA 90.

PLUMBING GENERAL NOTES:

1. PROVIDE NEW PLUMBING FIXTURES, PIPING AND VALVES. PROVIDE P–TRAP PIPE INSULATION KITS ON ADA ACCESSIBLE SINKS. PROVIDE DIELECTRIC UNIONS ON ALL CONNECTIONS BETWEEN DISSIMILAR METALS. SEE FIXTURE SCHEDULE FOR ROUGH–IN CONNECTIONS.

2. SLOPE ALL DRAINAGE PIPING 3–INCH AND BIGGER AT 1/8 INCH PER FOOT AND ALL DRAINAGE PIPING 2–1/2 INCH OR SMALLER AT A SLOPE NO LESS THAN 1/4–INCH PER FOOT. SANITARY DRAIN PIPING TO BE CAST IRON PIPE AND FITTINGS CONFORMING TO CISPI 301. PROVIDE CLEANOUTS REQUIRED BY PLUMBING CODE. DOMESTIC HOT AND COLD WATER, MAKE UP WATER, OVERFLOW AND DRAIN PIPING TO BE TYPE L HARD DRAWN COPPER CONFORMING TO ASTM B88 WITH WROUGHT–COPPER FITTINGS CONFORMING TO ASME B16.22. SLOPE COOLING TOWER/FLUID COOLER OVERFLOW AND DRAIN PIPING A MINIMUM OF 1/8–INCH PER FOOT. ALL DRAINS, SANITARY DRAINS, AND VENT PIPING RECEIVING CHEMICAL WASTES SHALL COMPLY WITH PLUMBING CODE.

3. EXTERIOR AND INTERIOR CONDENSATE DRAIN PIPING SHALL BE SCHEDULE 40 PVC PIPE.

4. NATURAL GAS PIPING SHALL BE SCHEDULE 40 BLACK STEEL CONFORMING TO ASTM A 53. NATURAL GAS PIPE FITTINGS SHALL BE MALLEABLE IRON THREADED FITTINGS CONFORMING TO ANSI B16.3.

5. FIELD VERIFY EXISTING PIPE ROUTES, SIZES, DEPTH AND SLOPE OF EXISTING SEWER PIPE PRIOR TO BIDDING AND INSTALLATION OF NEW PIPING. ENSURE NEW PIPING CAN INTEGRATE INTO EXISTING CONDITIONS.

6. ALL SANITARY DRAIN PIPING WILL REMAIN EXCEPT AS SHOWN OTHERWISE. ALL UNUSED EXISTING DOMESTIC COLD AND HOT WATER DISTRIBUTION PIPING WITHIN THE BUILDING WILL BE REMOVED.

7. THE EXISTING SANITARY DRAIN SYSTEM LAYOUT IS UNKNOWN. CONTRACTOR TO FIELD VERIFY SANITARY DRAINAGE PIPING SIZES AND LOCATIONS AS NECESSARY TO ACCOMMODATE THE NEW CONFIGURATION. IF ANY MAJOR DISCREPANCIES ARE FOUND, NOTIFY THE ENGINEER IMMEDIATELY.

8. SAW CUT EXISTING CONCRETE FLOOR AS REQUIRED TO ACCOMMODATE NEW SANITARY DRAIN PIPING AND COLD WATER WHERE REQUIRED.

9. RECONNECT NEW SYSTEM COMPONENTS TO EXISTING MAKE UP WATER AND CHEMICAL FEEDS AS NECESSARY.

10. FIELD ROUTE PIPING AS REQUIRED TO MAKE CONNECTIONS TO EXISTING PIPING, NEW AND EXISTING EQUIPMENT.

11. ALL ROOF AND ROOF OVERFLOW DRAINAGE PIPING TO BE PLUMBING CODE APPROVED ABS. PROVIDE EXPANSION JOINTS AS NECESSARY.

12. CALL FOR INSPECTION AND TEST FROM AUTHORITY HAVING JURISDICTION OF ALL SEWER PIPE, WATER PIPE AND NATURAL GAS PIPE PRIOR TO BACKFILL AND COVER PER PLUMBING CODE.

13. ALL PENETRATIONS THROUGH RATED WALLS AND FLOORS SHALL BE SEALED WITH A MATERIAL CAPABLE OF PREVENTING THE PASSAGE OF FLAMES AND HOT GASES. MATERIALS SHALL BE UL LISTED AND COMPLY WITH PLUMBING CODE.

14. FLUSH AND DISINFECT ALL POTABLE WATER SYSTEM AFTER FINAL INSTILLATION AND PRIOR TO BUILDING OCCUPANCY PER PLUMBING CODE.

15. INTERIOR NATURAL GAS SUPPLY OPERATING PRESSURE SHALL NOT EXCEED 5 PSI PER PLUMBING CODE.

16. PROVIDE THIRD PARTY TESTING AND CERTIFICATION OF ALL NATURAL GAS PIPE AND FITTING PER FUEL GAS CODE.

SUBMITTALS GENERAL NOTES:

1. PROVIDE SUBMITTALS FOR ALL SCHEDULED EQUIPMENT, ACCESSORIES, PIPE INSULATION, EQUIPMENT AND PIPE IDENTIFICATION. PROVIDE 5 COPIES IN 3 RING BINDERS. PROVIDE SUBMITTALS AS ONE COMPLETE PACKAGE. PROVIDE AS–BUILT DRAWINGS AND OPERATION AND MAINTENANCE MANUALS AT SUBSTANTIAL COMPLETION.

2. PROVIDE O&M MANUALS FOR ALL EQUIPMENT TO OWNER. INSTRUCT OWNER IN PROPER OPERATION AND MAINTENANCE OF EQUIPMENT. PROVIDE 3 BOUND COPIES.

DEMOLITION GENERAL NOTES:

1. VERIFY LOCATION OF EXISTING MECHANICAL, ELECTRICAL AND PIPING UTILITIES. PROTECT UTILITIES TO REMAIN. DISCONNECT, CAP AND REMOVE UTILITIES DESIGNATED FOR DEMOLITION.

2. PROVIDE REROUTING OF UTILITIES SERVING ADJACENT AREAS TO MAINTAIN UNINTERRUPTED SERVICE.

3. PROTECT ADJACENT AREAS FROM DAMAGE DURING PROGRESSION OF WORK. PROVIDE TEMPORARY SAFETY BARRIERS AS REQUIRED BY CODE TO ENSURE PUBLIC SAFETY AND CONTINUE BUILDING OCCUPANCY. DAMAGE TO EXISTING AREAS NOT INCLUDED IN THIS CONTRACT SHALL BE RESTORED TO EXISTING CONDITIONS AT THE CONTRACTORS EXPENSE.

4. PROVIDE REQUIRED DUST AND NOISE CONTROL MEASURES TO ENSURE CONTINUED OPERATION OF THE ADJOINING DEPARTMENTS.

5. REFER TO DEMOLITION PLAN KEY NOTES FOR REUSE OF SPECIFIC ITEMS IN THE NEW CONSTRUCTION. VERIFY SALVAGE OF OTHER ITEMS AND MATERIALS WITH THE OWNER. OWNER RESERVES THE RIGHT TO SALVAGE ANY AND ALL DEMOLITION ITEMS. REMOVE AND STORE SUCH ITEMS IN AREAS DESIGNATED BY THE OWNER.

6. REMOVE ALL NON SALVAGED ITEMS FROM THE JOB SITE AS THE WORK PROGRESSES. VERIFY THE HAULING ROUTE AND DUMPSTER LOCATION WHERE APPLICABLE WITH THE OWNER PRIOR TO START OF WORK. OWNER WILL SELECT SALVAGED EQUIPMENT TO RETAIN.

7. COORDINATE INSTALLATION OF NEW EQUIPMENT AND PIPING WITH EXISTING FIELD CONDITIONS, INCLUDING ROOF CONDUITS AND ROOF EQUIPMENT.

THE GENERAL NOTES SECTION IS COMPREHENSIVE. SOME MECHANICAL, PLUMBING, SUBMITTAL, GENERAL AND DEMOLITION NOTES MAY NOT APPLY TO THIS PROJECT

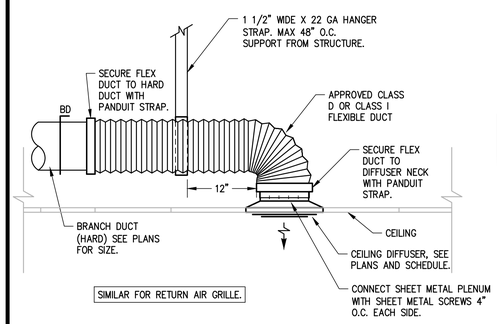

CEILING DIFFUSER CONNECTION

DETAIL A / M0.2 — SCALE: NONE

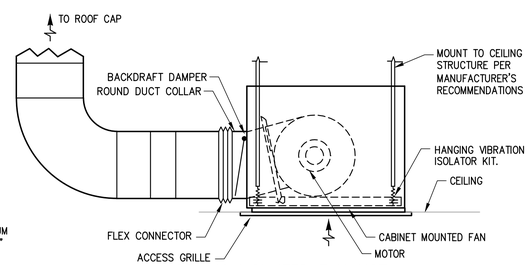

CEILING MOUNTED EXHAUST FAN INSTALLATION

DETAIL B / M0.2 — SCALE: NONE

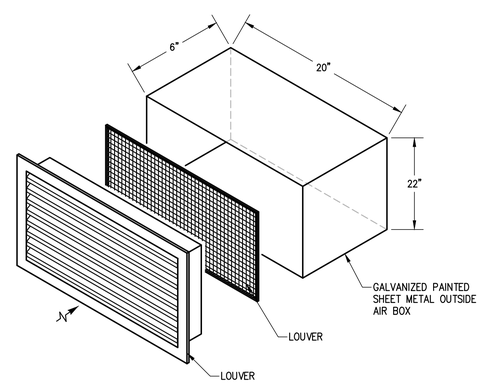

LOUVER

DETAIL C / M0.2 — SCALE: NONE

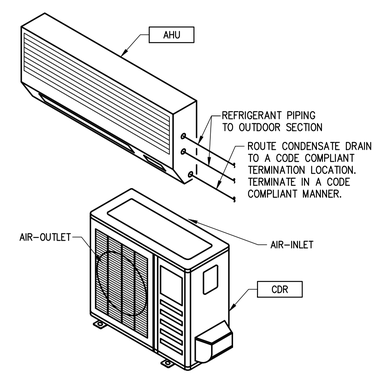

SPLIT SYSTEM AIR CONDITIONING UNIT

DETAIL D / M0.2 — SCALE: NONE

JOHNSTON ENGINEERING COMPANY
HEATING, VENTILATION, AIR CONDITIONING, PLUMBING
9777 N. 91ST ST., STE 100, SCOTTSDALE, AZ 85258
TELEPHONE (480) 443-8773 • FAX (480) 443-4591

THE GREAT SEAL OF GILA COUNTY ARIZONA 1881

22374 THOMAS W. JOHNSTON 4-8-15 ARIZONA, U.S.A.
Expires 6/30/2015

GENERAL NOTES AND DETAILS

COPPER ADMIN BUILDING
GILA COUNTY PUBLIC WORKS
DEPARTMENT GLOBE, ARIZONA

PROJECT NUMBER:	15013
DATE: 04-08-2015	
DRAWN BY: E. GONZALEZ	
DESIGNED BY: E. GONZALEZ	
APPROVED BY: T. JOHNSTON	
SHEET NUMBER:	M0.2

ALL DRAWINGS CONTAINED HEREIN WERE DESIGNED AND DRAWN IN THE U.S.A. COPYRIGHT 2015 JOHNSTON ENGINEERING COMPANY. DRAWINGS ARE FOR USE SOLELY IN RESPECT TO THIS PROJECT. THEY ARE NOT TO BE USED ON OTHER PROJECTS OR FOR ADDITIONS TO THE SCOPE OF WORK WITHOUT THE SPECIFIC WRITTEN CONSENT OF JOHNSTON ENGINEERING COMPANY

LOUVER SCHEDULE

EQUIPMENT IDENTIFIER	MANUFACTURER & MODEL NO.	CFM	FREE AREA (SQ. FT)	LOUVER SIZE	REMARKS
LVR-1,2,3,4	GREENHECK EDJ-601	450	1.18	22"x20"	1

1 PROVIDE BIRD SCREEN.

EXHAUST FAN SCHEDULE

EQUIPMENT IDENTIFIER	MANUFACTURER & MODEL NO.	AIR CAPACITIES		ELECTRICAL INFORMATION			SONES	WEIGHT (lbs)	REMARKS
		CFM	ESP	VOLTS	PH	HP (WATTS)			
EF-1,2,3,4	GREENHECK SP-A290	225	0.35	115	1	108	3.0	24	1
EF-5,6,7	GREENHECK SP-B90	70	0.25	115	1	54	2.5	9	1
EF-8	GREENHECK SP-B150	125	0.25	115	1	150	3.5	10	

1 FAN TO OPERATE FROM RESTROOM LIGHT SWITCH. PROVIDE PLASTIC GRILLE, BACKDRAFT DAMPER AND ROOF CAP.

DIFFUSER AND GRILLE SCHEDULE 4

AIR DISTRIBUTION IDENTIFIER	RATED CFM	NECK SIZE 1	MAX PRESSURE LOSS	MODEL NO. 2	THROW (FEET)	FACE SIZE	NOISE CRITERIA	REMARKS
CSD-1	100	6"	0.028	SCD	7/4	12"X12" OR 24"X24"	–	3
CSD-2	200	8"	0.06	SCD	11/8	12"X12" OR 24"X24"	–	3
CSD-3	380	10"	0.06	SCD	10	24"X24"	17	3
CSD-4	550	12"	0.07	SCD	12	24"X24"	19	3
CRG-1/CEG-1	100	6"	0.042	PDDR	–	24"X24"	–	
CRG-2/CEG-2	250	8"	0.083	PDDR	–	24"X24"	–	
CRG-3/CEG-3	450	10"	0.108	PDDR	–	24"X24"	–	
CRG-4/CEG-4	725	14"	0.083	PDDR	–	24"X24"	–	
CRG-5/CEG-5	1370	18"X18"	0.074	PDDR	–	24"X24"	21	

1 DIMENSION IS DUCT SIZE. 2 MANUFACTURER MODEL NO. IS PRICE.
3 WITH HORIZONTAL/ VERTICAL ADJUST. 4 CEILING DIFFUSER/GRILLES ARE FOR DIRECT DUCT ATTACHMENT.

SPLIT SYSTEM AIR CONDITIONING UNIT SCHEDULE

EQUIPMENT NUMBER	INDOOR UNIT MANUFACTURER MODEL	OUTDOOR UNIT MANUFACTURER MODEL	AIR CAPACITIES		MIN. SEER (EER)	HEATING/COOLING CAPACITY							ELECTRICAL DATA				WEIGHT LBS	REMARKS
			TOTAL CFM	BLOWER HP		CYCLE	ENT AIR		AMBIENT		MBH		UNIT		INDOOR UNIT VOLTS/PHASE	OUTDOOR UNIT VOLTS/PHASE		
							DB	WB	DB	WB	SEN	TOT	MCA	MOCP				
ACU-1 CDR-1	MITSUBISHI PKA-A24KA	MITSUBISHI PUY-A24NHA	800	1/3	17.0	COOL	80.0	67.0	115.0	–	17.19	22.32	18.0	30.0	230V 1PH	230V 1PH	ACU = 53 CDR = 163	1 2
						HEAT	–	–	–	–	–	–						

1 MITSUBISHI OR APPROVED EQUAL. 2 PROVIDE MANUFACTURER INTERNAL CONDENSATE DRAIN PUMP, MANUFACTURER AIR FILTER ACCESSORIES AND REMOTE PROGRAMMABLE THERMOSTAT.

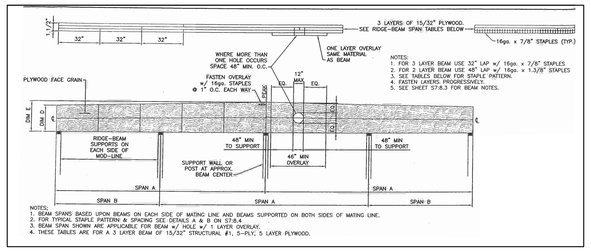

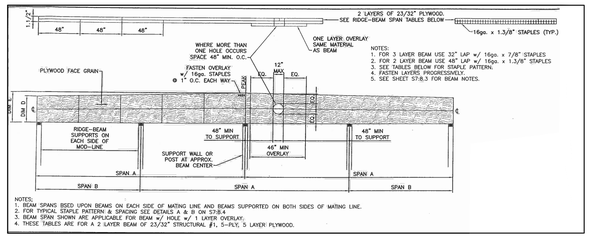

PLYWOOD BEAM PENETRATION DETAIL

DETAIL A / M0.3

SCALE: NONE

VENTILATION CALCULATIONS

UNIT	OCCUPANCY CLASSIFICATION	OCCUPANTS PER 1,000 SQ. FT.	CFM PER OCCUPANT	CFM PER SQ. FT.	AREA (SQ. FT.)	QTY. OF OCCUPANTS	AREA OSA CFM MINIMUM	AREA CFM TOTAL	UNIT OSA MINIMUM	UNIT OSA MAXIMUM
HP-1	STORAGE ROOM	0	0	0.15	43	0	6	6	16	316
	CORRIDORS	0	0	0.1	104	0	10	10		
	CONFERENCE ROOM	50	20	0	547	15	0	300		
HP-2	OFFICE SPACE	7	20	0	109	1	0	20	33	253
	CORRIDORS	0	0	0.1	333	0	33	33		
	CONFERENCE ROOM	50	20	0	252	10	0	200		
HP-3	OFFICE SPACE	7	20	0	357	3	0	50	78	128
	CORRIDORS	0	0	0.1	143	0	14	14		
	STORAGE ROOM	0	0	0.15	424	0	64	64		
HP-4	OFFICE SPACE	7	20	0	404	4	0	80	43	123
	STORAGE ROOM	0	0	0.15	289	0	43	43		
HP-5	OFFICE SPACE	7	20	0	334	3	0	60	33	93
	CORRIDORS	0	0	0.1	328	0	33	33		
HP-6	OFFICE SPACE	7	20	0	569	4	0	80	31	111
	STORAGE ROOM	0	0	0.15	205	0	31	31		
HP-7	OFFICE SPACE	7	20	0	474	3	0	60	43	134
	BREAK ROOMS	25	5	0.06	246	6	15	46		
	STORAGE ROOM	0	0	0.15	187	0	28	28		
HP-8	OFFICE SPACE	7	20	0	218	1	0	20	0	178
	LIBRARIES	20	15	0	527	11	0	158		
HP-9	OFFICE SPACE	7	20	0	298	1	0	20	0	320
	CONFERENCE ROOM	50	20	0	443	15	0	300		
HP-10	STORAGE ROOM	0	0	0.15	347	0	52	52	52	252
	CONFERENCE ROOM	50	20	0	256	10	0	200		
HP-11	OFFICE SPACE	7	20	0	656	6	0	120	0	120
HP-12	OFFICE SPACE	7	20	0	516	3	0	60	0	135
	LOBBIES	60	15	0	325	5	0	75		
HP-13	RECEPTION AREA	30	5	0.06	558	17	33	117	45	129
	CORRIDORS	0	0	0.1	115	0	12	12		
HP-14	OFFICE SPACE	7	20	0	608	6	0	120	24	144
	CORRIDORS	0	0	0.1	240	0	24	24		
HP-15	STORAGE ROOM	0	0	0.15	123	0	18	18	18	78
	OFFICE SPACE	7	20	0	478	3	0	60		
HP-16	OFFICE SPACE	7	20	0	640	5	0	100	14	114
	CORRIDORS	0	0	0.1	135	0	14	14		
HP-17	STORAGE ROOM	0	0	0.15	121	6	18	18	97	97
	CORRIDORS	0	0	0.1	788	0	79	79		
HP-18	OFFICE SPACE	7	20	0	252	4	0	80	320	350 2
	CORRIDORS	0	0	0.1	87	0	9	9		
HP-19	OFFICE SPACE	7	20	0	240	1	0	20	320	350 2
	STORAGE ROOM	0	0	0.15	123	0	18	18		
HP-20	OFFICE SPACE	7	20	0	161	1	0	20	42	62
	CORRIDORS	0	0	0.1	419	0	42	42		
HP-21	OFFICE SPACE	7	20	0	635	5	0	100	15	115
	CORRIDORS	0	0	0.1	150	0	15	15		
HP-22	OFFICE SPACE	7	20	0	670	6	0	120	35	155
	STORAGE ROOM	0	0	0.15	235	0	35	35		
HP-23	OFFICE SPACE	7	20	0	162	1	0	20	64	84
	CORRIDORS	0	0	0.1	641	0	64	64		
HP-24	OFFICE SPACE	7	20	0	402	2	0	40	18	133
	LOBBIES	60	15	0	229	5	0	75		
	STORAGE ROOM	0	0	0.15	117	0	18	18		

1 CALCULATIONS BASED ON 2003 IMC TABLE 403.3. BALANCE TO UNIT MAXIMUM OSA CFM. CFM SHOWN IS FOR EACH UNIT.
2 VENTILATION AIR PROVIDED EXCEEDS CODE REQUIRED MINIMUM DUE TO RESTROOM EXHAUST.

JOHNSTON ENGINEERING COMPANY
HEATING, VENTILATION, AIR CONDITIONING, PLUMBING
9777 N. 91ST ST., STE 100, SCOTTSDALE, AZ 85258
TELEPHONE (480) 443-8773 • FAX (480) 443-4591

THE GREAT SEAL OF GILA COUNTY ARIZONA 1881

22374 THOMAS W. JOHNSTON 4-8-15 ARIZONA, U.S.A.
Expires 6/30/2015

SCHEDULES, DETAILS AND VENTILATION CALCULATIONS

COPPER ADMIN BUILDING
GILA COUNTY PUBLIC WORKS
DEPARTMENT GLOBE, ARIZONA

PROJECT NUMBER: 15013
DATE: 04-08-2015
DRAWN BY: E. GONZALEZ
DESIGNED BY: E. GONZALEZ
APPROVED BY: T. JOHNSTON
SHEET NUMBER: M0.3

ALL DRAWINGS CONTAINED HEREIN WERE DESIGNED AND DRAWN IN THE U.S.A. COPYRIGHT 2015 JOHNSTON ENGINEERING COMPANY. DRAWINGS ARE FOR USE SOLELY IN RESPECT TO THIS PROJECT. THEY ARE NOT TO BE USED ON OTHER PROJECTS OR FOR ADDITIONS TO THE SCOPE OF WORK WITHOUT THE SPECIFIC WRITTEN CONSENT OF JOHNSTON ENGINEERING COMPANY

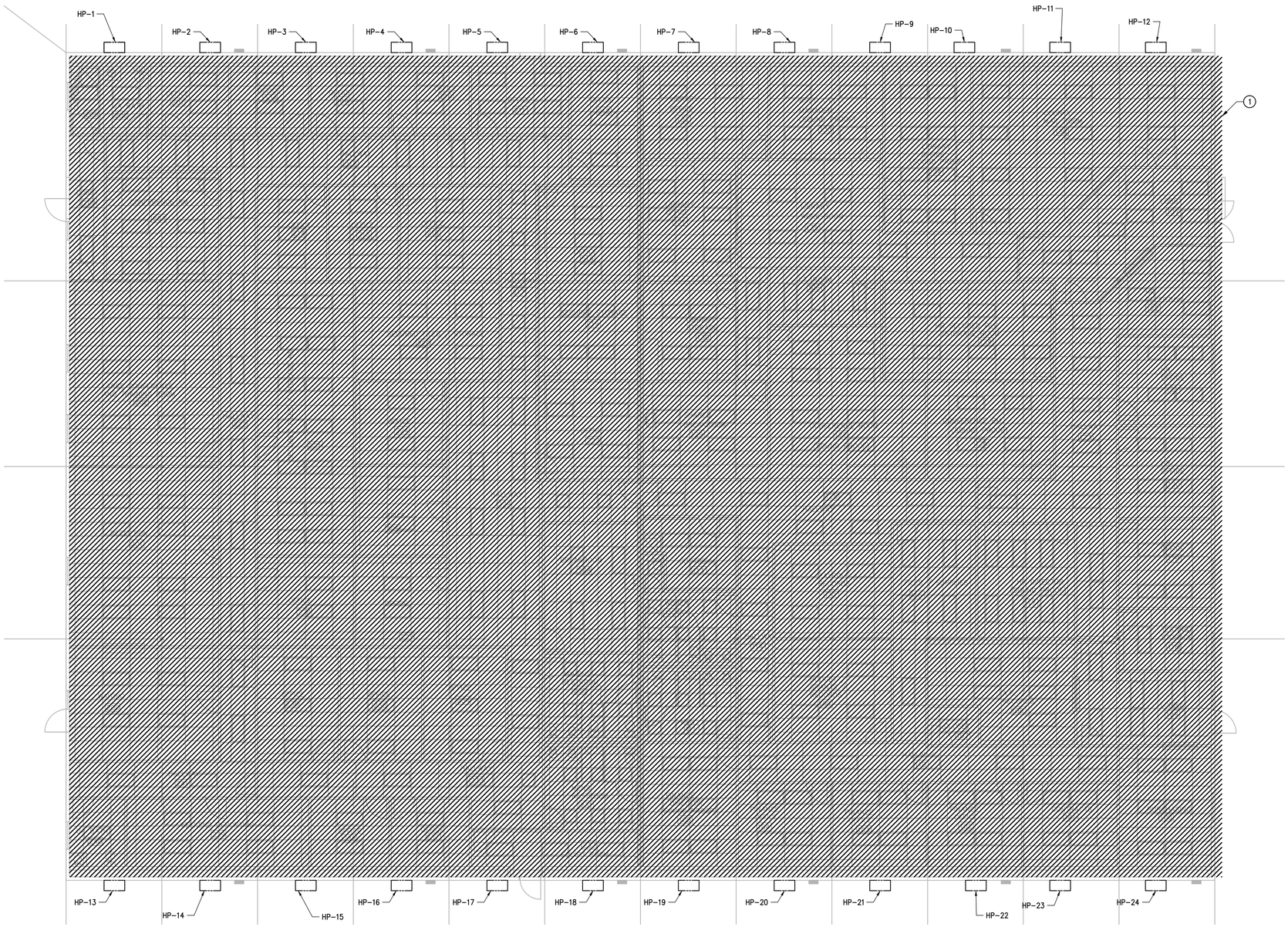

MECHANICAL DEMOLITION PLAN

SCALE: 1/8"=1'-0"

NORTH

DEMOLITION NOTES

1. REMOVE ALL EXISTING DUCTWORK, SUPPLY DIFFUSERS, EXHAUST FANS AND RETURN AND EXHAUST GRILLES.

JOHNSTON ENGINEERING COMPANY
HEATING, VENTILATION, AIR CONDITIONING, PLUMBING
9777 N. 91ST ST., STE 100, SCOTTSDALE, AZ 85258
TELEPHONE (480) 443-8773 • FAX (480) 443-4591

THE GREAT SEAL OF GILA COUNTY ARIZONA 1881

22374 THOMAS W. JOHNSTON 4-8-15 REGISTERED PROFESSIONAL ENGINEER (MECHANICAL) ARIZONA, U.S.A.

Expires 6/30/2015

MECHANICAL DEMOLITION PLAN

COPPER ADMIN BUILDING
GILA COUNTY PUBLIC WORKS
DEPARTMENT GLOBE, ARIZONA

PROJECT NUMBER:	15013
DATE: 04-08-2015	
DRAWN BY: E. GONZALEZ	
DESIGNED BY: E. GONZALEZ	
APPROVED BY: T. JOHNSTON	
SHEET NUMBER:	M1.1

ALL DRAWINGS CONTAINED HEREIN WERE DESIGNED AND DRAWN IN THE U.S.A. COPYRIGHT 2015 JOHNSTON ENGINEERING COMPANY. DRAWINGS ARE FOR USE SOLELY IN RESPECT TO THIS PROJECT. THEY ARE NOT TO BE USED ON OTHER PROJECTS OR FOR ADDITIONS TO THE SCOPE OF WORK WITHOUT THE SPECIFIC WRITTEN CONSENT OF JOHNSTON ENGINEERING COMPANY

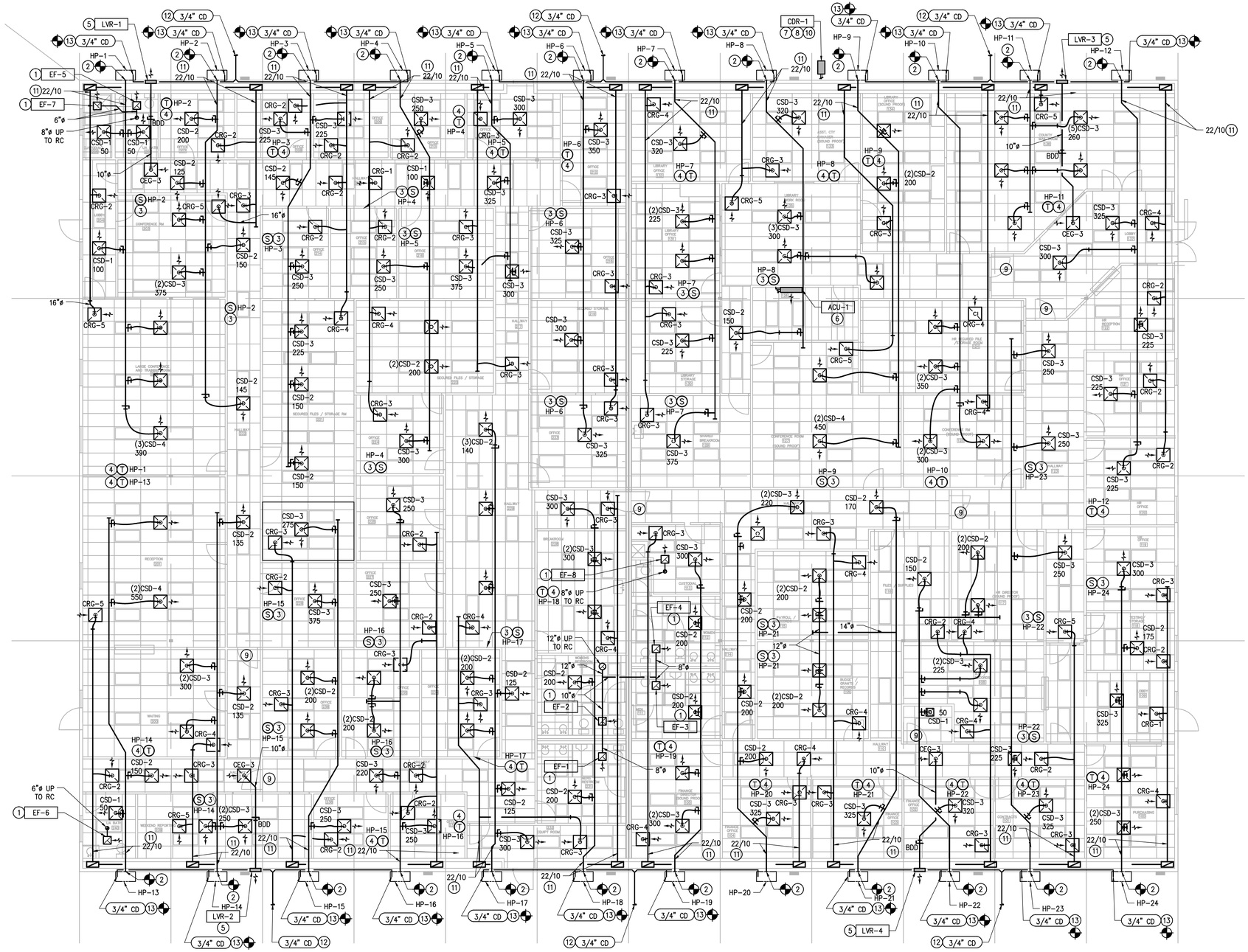

MECHANICAL PLAN
SCALE: 1/8"=1'-0"
NORTH

KEY NOTES

1. PROVIDE CEILING MOUNTED EXHAUST FAN. INSTALL PER MANUFACTURER'S RECOMMENDATIONS. SEE SCHEDULE AND DETAIL B/M0.2.

2. CONNECT NEW 22/10 SUPPLY AND RETURN AIR DUCTWORK TO EXISTING HP AS SHOWN.

3. PROVIDE REMOTE TEMPERATURE SENSOR AS SHOWN. USE THE AVERAGE TEMPERATURE FOR ALL SENSORS TO CONTROL UNIT OPERATION. CONNECT TO UNIT SERVING SPACE. SENSOR SHALL BE COMPATIBLE WITH KMC FLEXSTAT 120063.

4. PROVIDE KMC FLEXSTAT 120063 TEMPERATURE SENSOR WITH CONTROLLER AS SHOWN. USE THE AVERAGE TEMPERATURE FOR ALL SENSORS TO CONTROL UNIT OPERATION. CONNECT TO UNIT SERVING SPACE.

5. PROVIDE LOUVER. LOCATE MINIMUM 10 FEET AWAY FROM ANY BUILDING OPENING AND AT LEAST 10 FEET ABOVE ADJACENT GRADE. SEE SCHEDULE AND DETAIL C/M0.2.

6. PROVIDE NEW DUCTLESS SPLIT SYSTEM AIR CONDITIONING UNIT. COORDINATE WITH SPACE CONSTRAINTS. SEE SPLIT SYSTEM AIR CONDITIONING UNIT SCHEDULE AND DETAIL D/M0.2. PROVIDE MANUFACTURERS' CLEARANCES. FIELD ROUTE REFRIGERANT PIPING BETWEEN INDOOR AND OUTDOOR UNITS UTILIZING THE SHORTEST PRACTICAL DISTANCE. REFRIGERANT PIPING SIZES SHALL BE PER MANUFACTURERS' RECOMMENDATIONS TO ENSURE FUNCTION & WARRANTY. INSULATE ALL PIPES WITH ARMAFLEX CELLULAR FOAM AND PROVIDE METAL JACKET ON OUTDOOR EXPOSED PIPES. ROUTE CONDENSATE DRAIN PIPING THROUGH CEILING SPACE DOWN TO NEAREST MOPSINK, LAVATORY TAILPIECE OR EXTERIOR PLANTER. PROVIDE AIR GAP AND SUPPORT CONDENSATE PIPING PER 2003 IMC AND 2003 IPC.

7. PROVIDE NEW MINI-SPLIT SYSTEM AIR CONDITIONING OUTDOOR UNIT. PROVIDE MANUFACTURER'S RECOMMENDED CLEARANCES. SEE SCHEDULE AND DETAIL D/M0.2.

8. FIELD ROUTE REFRIGERANT PIPING BETWEEN INDOOR AND OUTDOOR UNITS UTILIZING THE SHORTEST PRACTICAL DISTANCE. REFRIGERANT PIPING SIZES SHALL BE PER MANUFACTURER'S RECOMMENDATIONS TO ENSURE FUNCTION & WARRANTY. INSULATE ALL PIPES WITH ARMAFLEX CELLULAR FOAM AND PROVIDE METAL JACKET ON OUTDOOR EXPOSED PIPES.

9. UNDERCUT DOOR BY 1-INCH TO PROVIDE RETURN AIR PATH.

10. PROVIDE FENCING AROUND MINI-SPLIT SYSTEM OUTDOOR UNIT.

11. PROVIDE 22/10 SUPPLY AND RETURN AIR MAIN DUCTWORK UP TO CONNECTION OF THE LAST DIFFUSER/GRILE.

12. ROUTE CONDENSATE DRAIN THRU CONCRETE CURB AND TERMINATE FLUSH WITH CURB SIDEWALL.

13. CONNECT 3/4" CONDENSATE DRAIN PIPE TO EXISTING HEAT PUMP AS SHOWN. ROUTE CONDENSATE DRAIN PIPE AGAINST THE ADJACENT WALL AND CONNECT TO CONDENSATE PIPE BELOW BUILDING. COORDINATE CONDENSATE DRAIN PIPING WITH BUILDING SUPPORTS.

ALL PLYWOOD BEAM PENETRATIONS SHALL BE DONE PER BUILDING MANUFACTURER SPECIFICATIONS. SEE DETAIL A/M0.3. CONTACT MODULAR SOLUTIONS LTD. AT (602) 952-9741 FOR MORE INFORMATION.

JOHNSTON ENGINEERING COMPANY
HEATING, VENTILATION, AIR CONDITIONING, PLUMBING
9777 N. 91ST ST., STE 100, SCOTTSDALE, AZ 85258
TELEPHONE (480) 443-8773 • FAX (480) 443-4591

THE GREAT SEAL OF GILA COUNTY ARIZONA 1881

22374 THOMAS W. JOHNSTON 4-8-15 ARIZONA, U.S.A.
Expires 6/30/2015

MECHANICAL PLAN

COPPER ADMIN BUILDING
GILA COUNTY PUBLIC WORKS
DEPARTMENT GLOBE, ARIZONA

PROJECT NUMBER:	15013
DATE:	04-08-2015
DRAWN BY:	E. GONZALEZ
DESIGNED BY:	E. GONZALEZ
APPROVED BY:	T. JOHNSTON
SHEET NUMBER:	M2.1

ALL DRAWINGS CONTAINED HEREIN WERE DESIGNED AND DRAWN IN THE U.S.A. COPYRIGHT 2015 JOHNSTON ENGINEERING COMPANY. DRAWINGS ARE FOR USE SOLELY IN RESPECT TO THIS PROJECT. THEY ARE NOT TO BE USED ON OTHER PROJECTS OR FOR ADDITIONS TO THE SCOPE OF WORK WITHOUT THE SPECIFIC WRITTEN CONSENT OF JOHNSTON ENGINEERING COMPANY